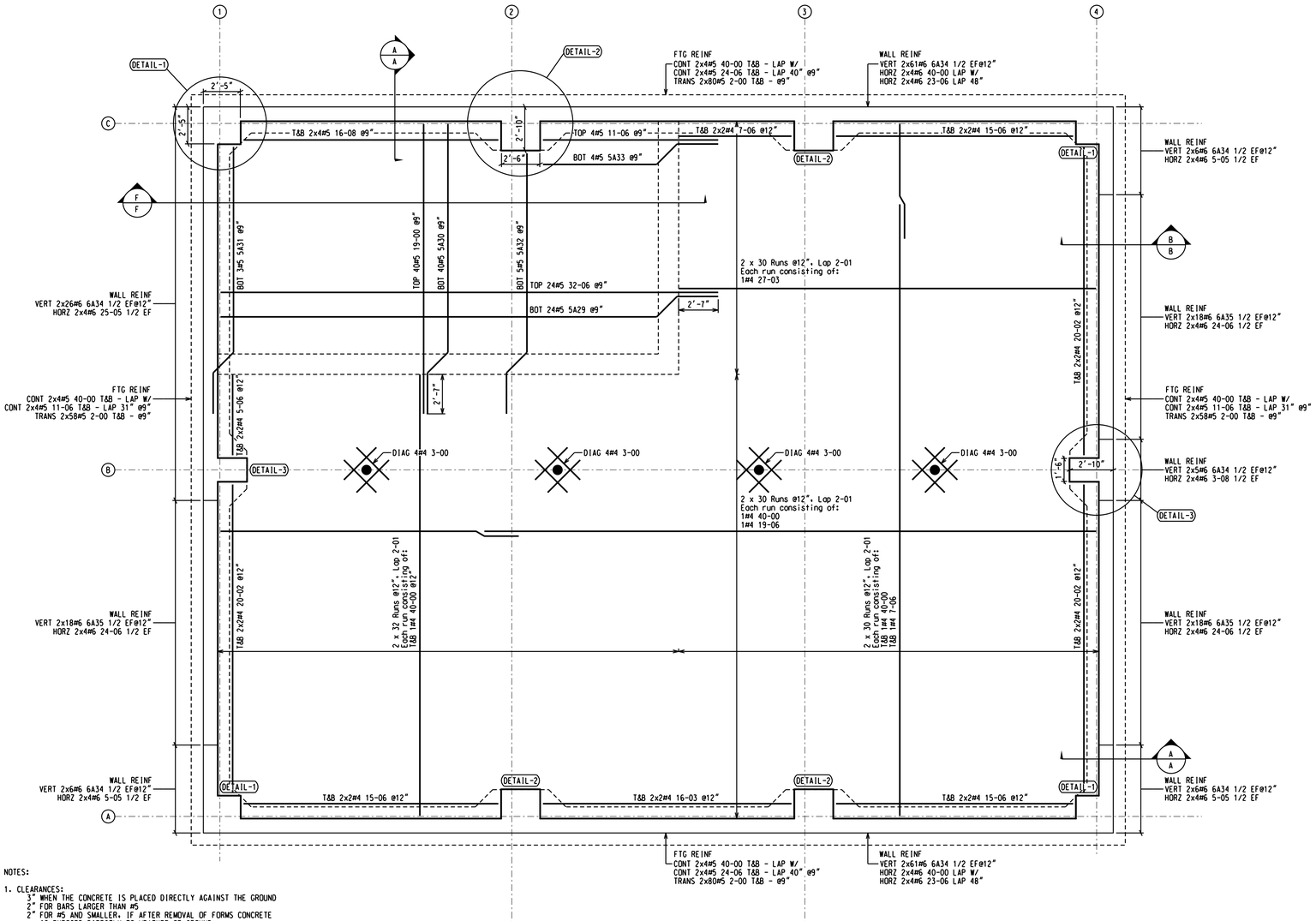

GARAGE/STORAGE BUILDING - FOUNDATION

SCALE: 1/4" = 1'-0"

NOTES:

1. CLEARANCES:
   3" WHEN THE CONCRETE IS PLACED DIRECTLY AGAINST THE GROUND
   2" FOR BARS LARGER THAN #5
   2" FOR #5 AND SMALLER. IF AFTER REMOVAL OF FORMS CONCRETE IS EXPOSED DIRECTLY TO WEATHER OR GROUND
   2" IN SLABS AND WALLS. AND 1 1/2" FOR BEAMS AND COLUMNS NOT EXPOSED DIRECTLY TO WEATHER OR GROUND
2. FRACTIONS ARE DISPLAYED IN QUARTER INCHES.
   EXAMPLE: 0-041 = 4 1/4". 0-042 = 4 1/2". 0-043 = 4 3/4"
3. DETAILED FROM STRUCTURAL DWGS DATED 3/7/16.

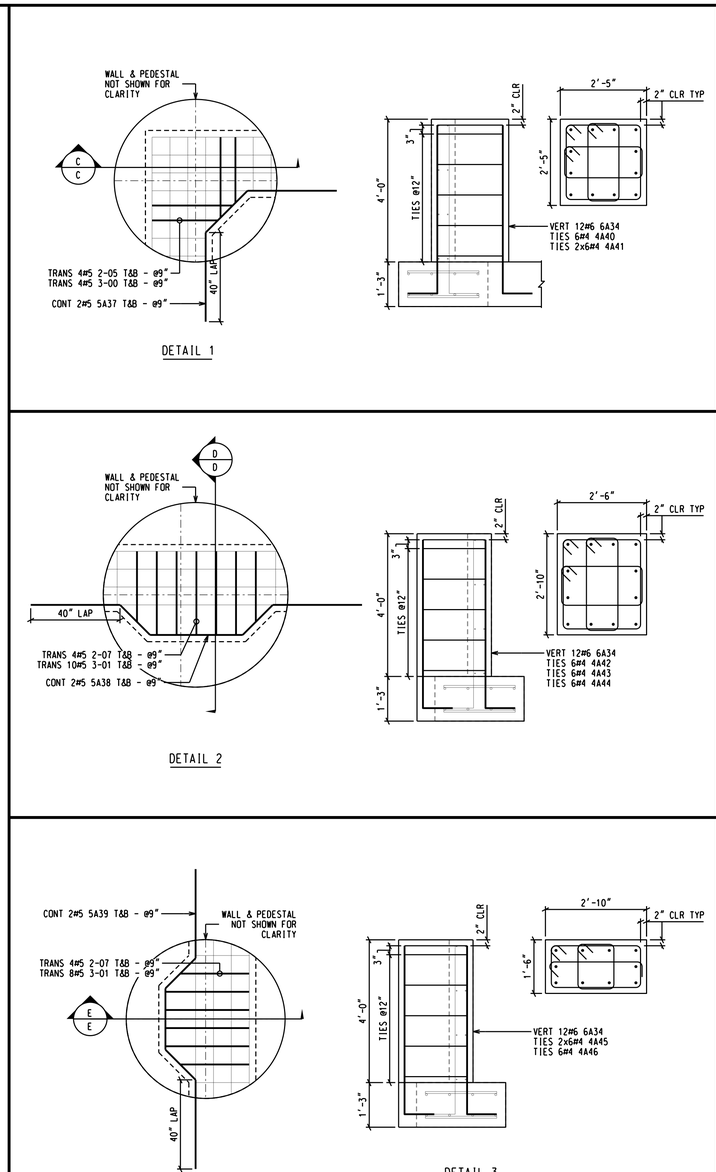

#	REVISION / ISSUE DESCRIPTION	DATE
0	For Approval	4/14/16
1	FILE AND FIELD	4/19/16

FOR FILE & FIELD USE

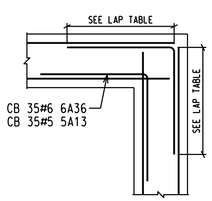

LAP CHART		
SIZE	TOP	OTHER
3	24"	19"
4	32"	25"
5	40"	31"
6	48"	37"
7	70"	54"
8	80"	62"
9	91"	70"
10	79"	61"
11	87"	67"

TYP FTG & WALL CORNER DETAIL

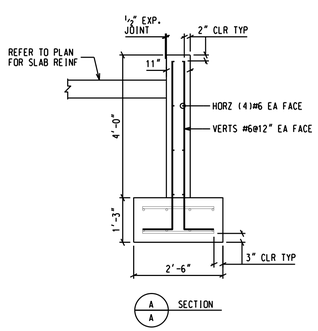

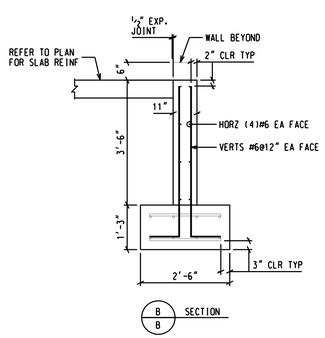

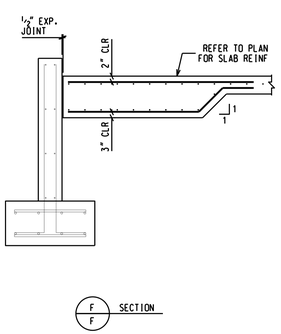

	SIZE	EP	BAR MARK	V	BND TYP	CD	A	B	C	D	E	F/R	G	H	J	K	O
2	6		6A34		2		1-00	4-082									
	6		6A35		2		1-00	4-023									
3	6		6A36		17			4-03	4-03								
	5		5A13		17			3-06	3-06								
	5		5A29		3			2-09	1-103	28-061				1-04		1-04	32-071
	5		5A30		3			2-09	1-103	14-111				1-04		1-041	19-002
	5		5A31		3			2-09	1-103	13-051				1-04		1-041	17-062
	5		5A32		3			2-09	1-103	13-001				1-04		1-041	17-012
	5		5A33		3			2-09	1-103	7-051				1-04		1-04	11-061
17	5		5A37		3				3-06	2-022	3-06			2-053		2-053	7-013
	5		5A38		3			3-06	1-07	3-052	1-07	3-06		1-012		1-012	12-082
	5		5A39		3			3-06	1-07	2-032	1-07	3-06		1-012		1-012	11-062
T1	4		4A40		T1		0-042	2-01	2-01	2-01	2-01		0-042				
	4		4A41		T1		0-042	0-102	2-01	0-102	2-01		0-042				
	4		4A42		T1		0-042	2-02	2-06	2-02	2-06		0-042				
	4		4A43		T1		0-042	0-103	2-06	0-103	2-06		0-042				
	4		4A44		T1		0-042	1-00	2-02	1-00	2-02		0-042				
	4		4A45		T1		0-042	1-02	1-09	1-02	1-09		0-042				
T9	4		4A46		T9		0-042	2-06					0-042				

DRAWN BY: ROSEMARY MORALES
EMAIL: RMORALES@ADVANCEREBAR.COM
CHECKED BY:

GARAGE/STORAGE BUILDING
FOUNDATION

40059010
JOB NUMBER

THIS DRAWING IS FOR REBAR FABRICATION AND PLACING ONLY

R-E9910DB

Sheet Number
1 of 1